EN

QUICK INSTALLATION GUIDE

SMILE-G3-T12-INV / SMILE-G3-T15-INV / SMILE-G3-T20-INV

V01

01 Product Overview

(1) Grounding Points
(2) Communication Ports
(3) Wi-Fi Port
(4) Battery Circuit Breaker
(5) BAT - Connector
(6) BAT + Connector
(7) PV + Connectors / PV - Connectors
(8) PV Switch
(9) Backup Connector
(10) Grid Connector
(11) Parallel Communication Ports (Reserve)
(12) LED/LCD Display

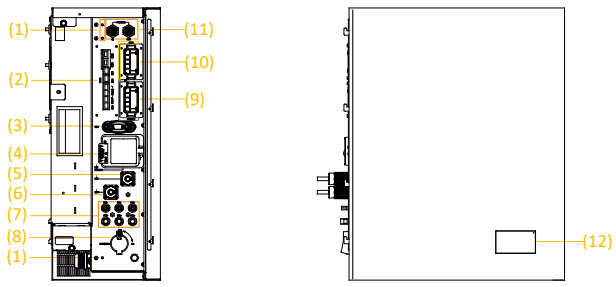

02 Accessories and Installation Tools

2.1 Scope of Delivery

Inverter (×1)	Positioning Plate (×1)	Wall Bracket (×1)	Right Cover (×1)	Cable Cover (×1)	Top Cover (×1)
Grid Connector (×1)	Backup Connector (×1)	PV+&PV- Connectors (×3)	Hexagon Head Large Washer Screw M5*12 (×3)	Wi-Fi Module (×1)	Wall Anchor (×6)
COM Connection Cover (×1)	AUX Terminal Block (×2)	Grounding Cable (×1)	Communication Cable between Inverter and 1st Series Battery * (×1)	Series Battery Main Negative Power Cable * (×1)	Series Battery Main Positive Power Cable * (×1)
Grounding Cable between two Column Series Batteries * (×1)	Communication Cable between two Column Series Batteries * (×1)	Power Cable between two Column Series Batteries * (×1)	System Wiring Diagram (×1)	Quick Installation Guide (×1)	

* : optional, suitable for series batteries.

2.2 Installation Tools

T20 Screwdriver	PH2 Screwdriver	Flat-Head Screwdriver	Socket Wrench	Wire Stripper	Network Plug Clamp
Crimping Pliers (Model:PV-CZM-22100)	Cord End Terminal Crimper	Current Clamp	Spirit Level	Hammer Drill, Bit φ10	Multimeter

03 Mounting the Inverter

Before installing the inverter, please ensure that the battery has been installed properly.

1 Position and mark the drilling location

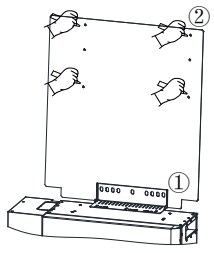

2 Secure the wall bracket

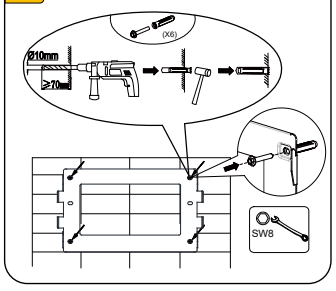

3 Hang the inverter onto the wall bracket

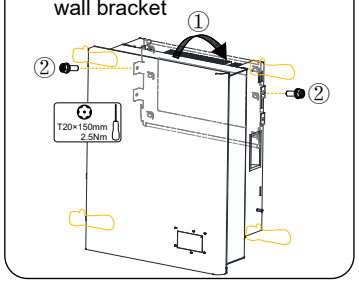

04 Electrical Connection

DANGER

You must protect each inverter with an individual grid/backup circuit breaker in order to ensure that the inverter can be disconnected safely.

WARNING

Before doing electrical connection, please ensure the PV switch & all AC and DC circuit breakers are switched OFF and cannot be reactivated.

NOTE

Please refer to System Wiring Diagram for detailed wiring.

4.1 Grounding Connection

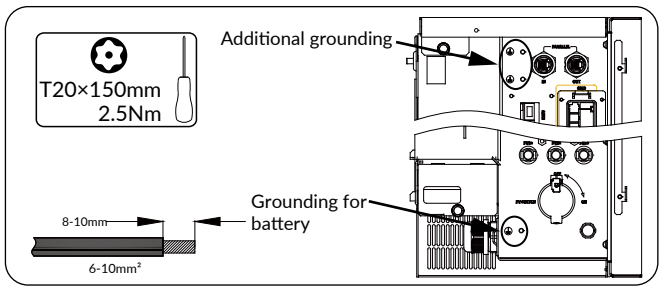

4.2 AC Connection

WARNING

Select a suitable circuit breaker and consider the factors influencing the ampacity of the cable: type of cable used, ambient temperature around the cable, type of cable routing, bundling of cables. Other influences on dimensioning: loop impedance, mutual heating of circuit breakers, ambient temperature at the circuit breaker, selectivity, type of connected device. If these factors are ignored, it increases the danger of the circuit breaker tripping under normal operating conditions.

AC connection recommendation for SMILE-G3-T12-INV

Description	Max. Current	Recommended AC Circuit Breaker Type	Recommend cable cross section
Grid Side	24.6A	40A	6~10mm²
Backup Side	21.7A	32A	6~10mm²

AC connection recommendation for SMILE-G3-T15-INV

Description	Max. Current	Recommended AC Circuit Breaker Type	Recommend cable cross section
Grid Side	29A	50A	6~10mm²
Backup Side	27.2A	40A	6~10mm²

AC connection recommendation for SMILE-G3-T20-INV

Description	Max. Current	Recommended AC Circuit Breaker Type	Recommend cable cross section
Grid Side	36.2A	50A	6~10mm²
Backup Side	36.2A	50A	6~10mm²

Grid and Backup Connection

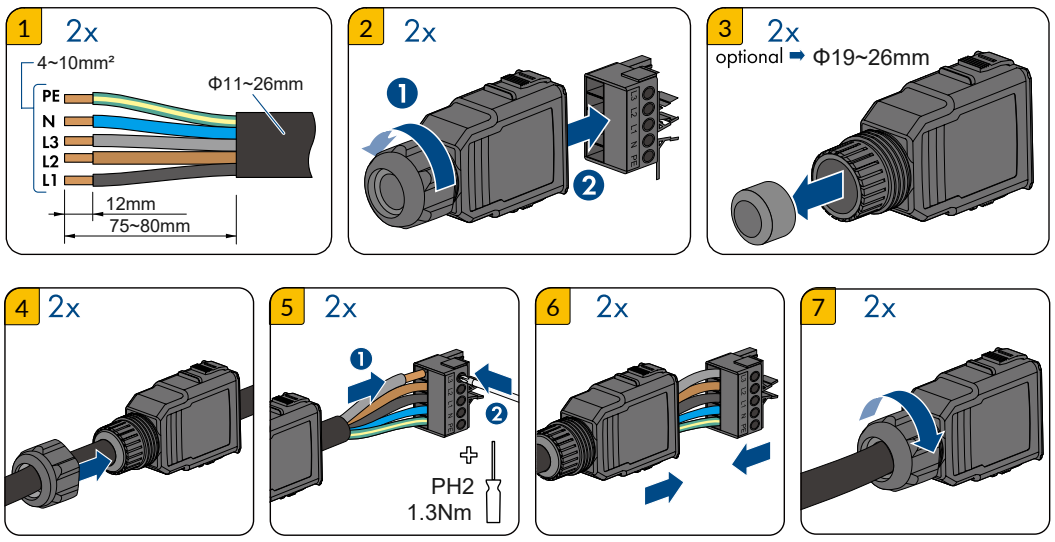

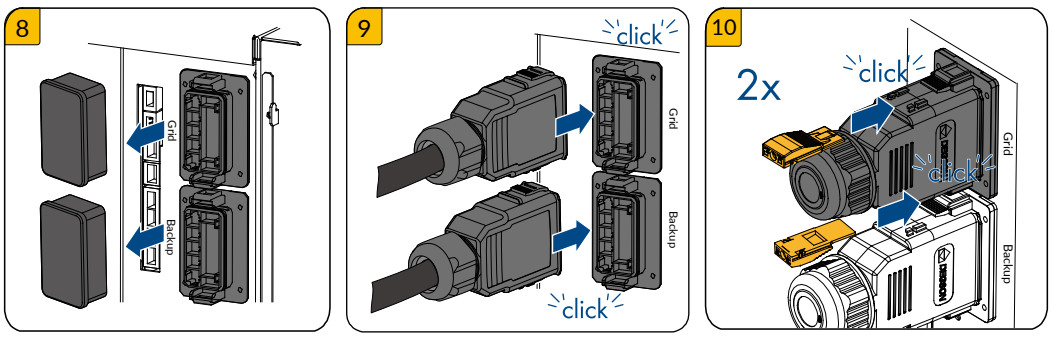

Disassembling

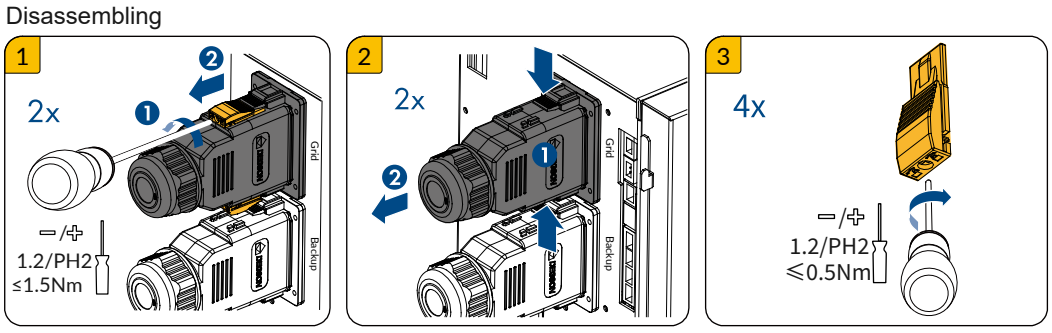

4.3 PV Connection

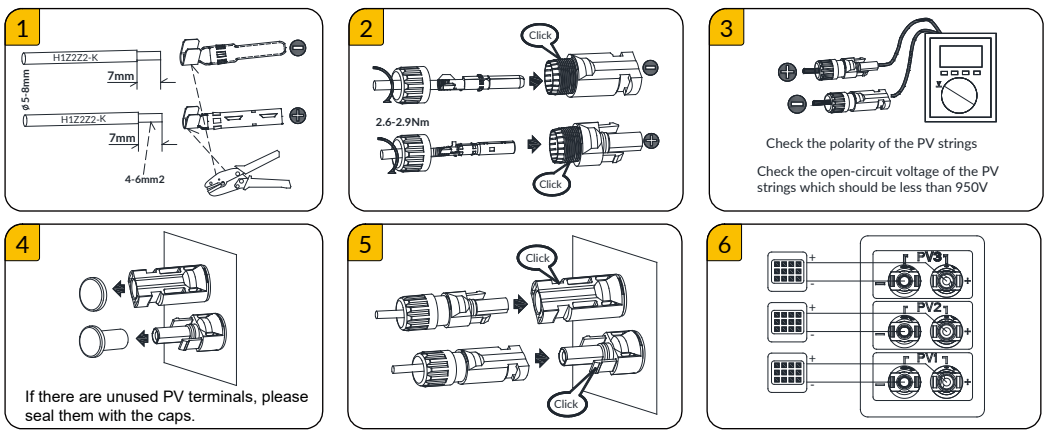

4.4 BAT Power Connection

DANGER

Danger to life due to burns caused by electric arcs through short-circuit currents.
Short-circuit currents in the battery can cause heat build-up and electric arcs. Heat build-up and electric arcs may result in lethal injuries due to burns.
•Disconnect the battery from all voltages sources prior to performing any work on the battery.
•Disconnect the inverter from all voltages sources prior to performing any work on the inverter.
•DO NOT short-circuit the battery terminals. First, complete the main negative terminal connection between battery and inverter, and then complete the main positive terminal connection between battery and inverter.
•Observe battery safety information provided in the Installation&Operation&Maintenance Manual.

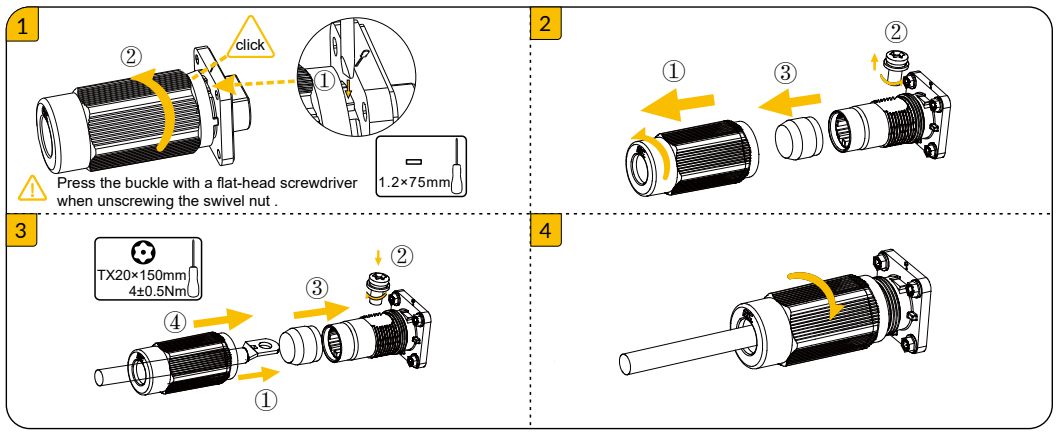

05 Communication Connection

5.1 Wi-Fi Connection

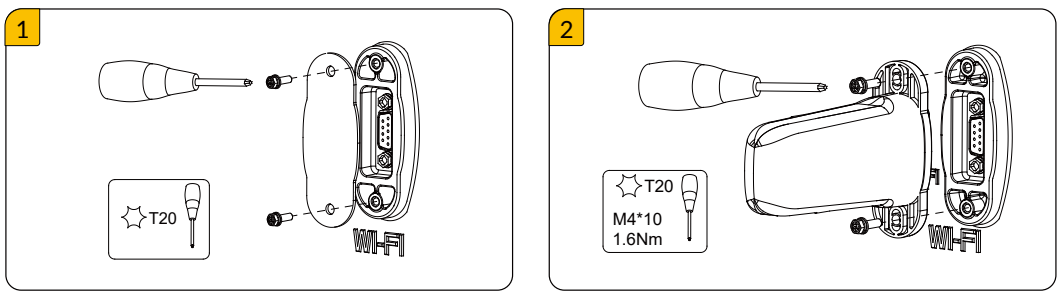

5.2 Other Communication Connection

AUX / LAN / DRM&RRCR / Meter / RS485 / BMS Connection

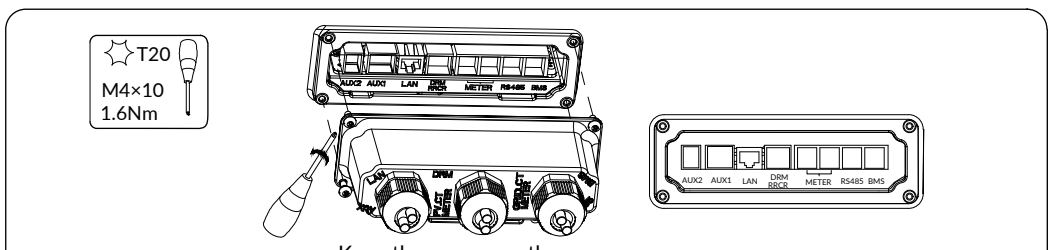

BMS	1	2	3	4	5	6	7	8
	/	RS485_A4	/	CAN1_H	CAN1_L	/	RS485_B4	/
RS 485	1	2	3	4	5	6	7	8
	12V	DEBUG_RXD_COM	GND	RS485_B5	RS485_A5	/	DEBUG_TXD_COM	/
METER	1	2	3	4	5	6	7	8
	/	/	RS485_A7	/	/	RS485_B7	/	/
DRM	1	2	3	4	5	6	/	/
	DRED 1 /5	DRED 2/6	DRED 3/7	DRED 4/8	REF GEN/0	COMLOAD/0	/	/
RRCR	1	2	3	4	5	6		
	K1	K2	K3	K4	3.3V	/		
AUX1	1	2	3	4	5	6		
	DO1_NO	DO1_COM	DO1_NC	DI_negative	DI_positive	GND		
AUX2	1	2	3	4	5	6		
	DO2_NO	DO2_COM	DO2_NC	DI_negative	DI_positive	GND		

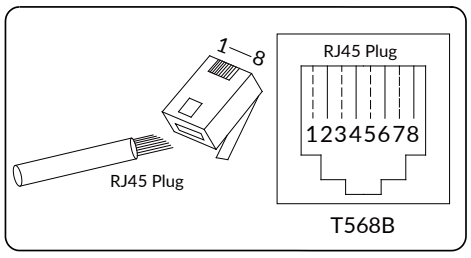

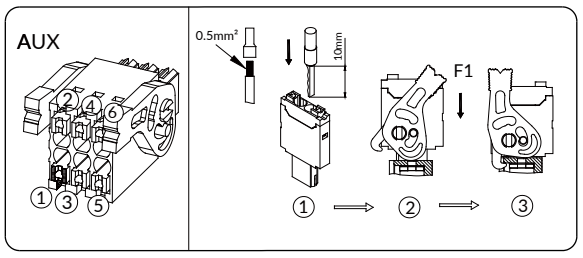

Wiring the Communication Cables to the Inverter

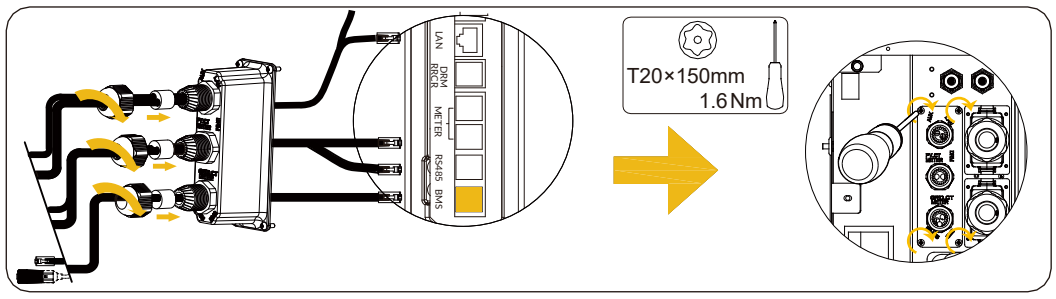

06 Commissioning

WARNING

Never power on the energy storage system without the correct and reliable installation and electrical connection.

Follow the steps in the COMMISSIONING GUIDE AND REPORT to download AlphaESS APP, register your account, power on the system, configure Wi-Fi module, set system parameter and operate the system. After completing the commissioning, please submit the commissioning report.

07 Power ON / OFF the Energy Storage System Procedure

Procedure for Powering ON the System

1) Switch on the battery circuit breaker at the left middle of the inverter.
2) Switch on the battery circuit breakers of all batteries.
3) Shortly press the battery power buttons of the parallel batteries. For more than one parallel battery installed, please shortly press all power buttons within 30 seconds. (For series batteries, please skip this step.)
4) Switch on the AC circuit breaker between the grid port of the inverter and the grid.
5) Switch on the AC circuit breaker between the backup port of the inverter and the loads.
6) Switch on the PV switch between the PV strings and the inverter if there is any.
7) Switch on the PV switch at the lower left of the inverter.
8) Switch on the AC circuit breaker (if there is any) between the PV-inverter and the grid.

Procedure for Powering OFF the System

1) Switch off the AC circuit breaker between the backup port of the inverter and the loads.
2) Switch off the PV switch at the lower left of the inverter.
3) Press and hold the power button of the battery for 6 seconds, which is near the battery circuit breaker. (For series batteries, please skip this step.)
4) Switch off the battery circuit breakers of all the batteries.
5) Switch off the battery circuit breaker which is on the left side of the inverter.
6) Switch off the AC circuit breaker (if there is any) between the PV-inverter and the grid.
7) Switch off the AC circuit breaker bettwen the grid port of the inverter and the grid.

08 Mounting the Covers

CAUTION

Make sure all the wiring has been done and the energy storage system works normally, then mount the covers of the inverter.

8.1 Mounting the Top Cover

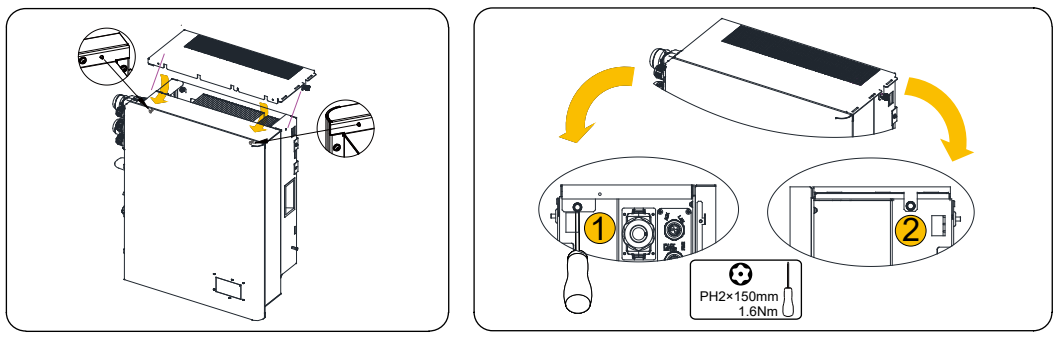

8.2 Mounting the Right Cover

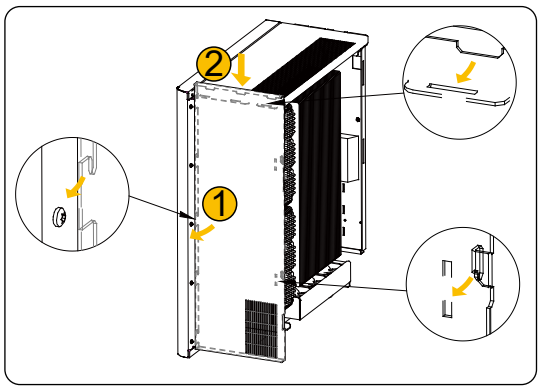

8.3 Mounting the Cable Cover

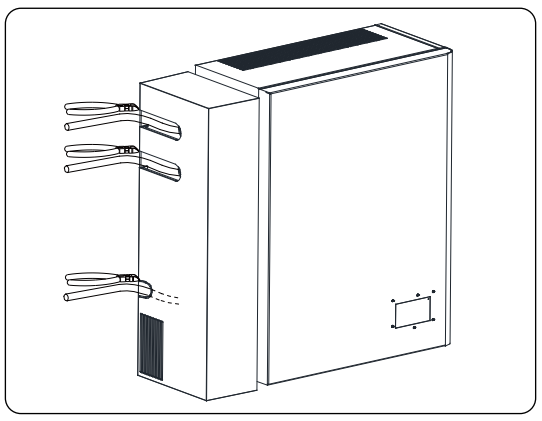

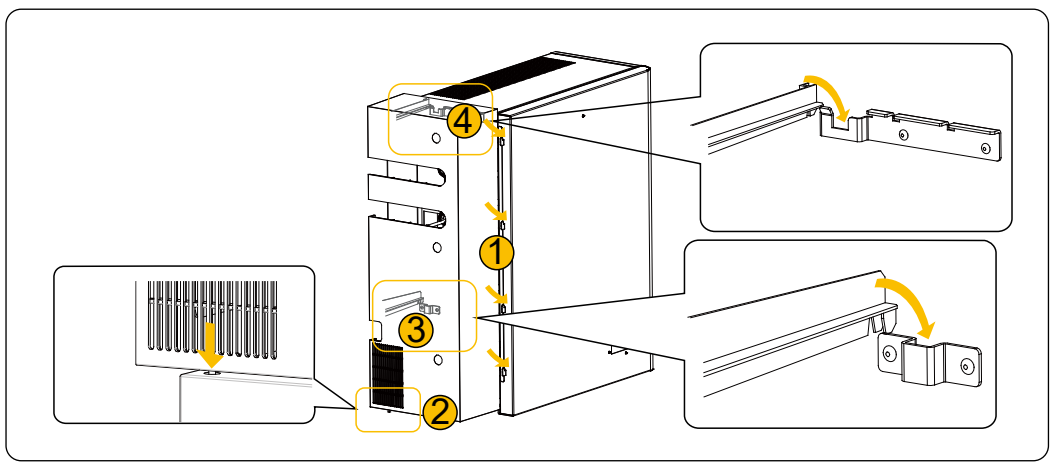

For more information, please download the user manual and other technical documents.

APP Manual (Installer)

AlphaCloud Manual (Installer)

APP Manual (End-user)

AlphaCloud Manual (End-user)

System Datasheet